352 G 3-teiliger Kugelhahn, I/I-Gewinde, voller Durchgang, V4A / 3-pc. Ball Valve, F/F-thread, full port

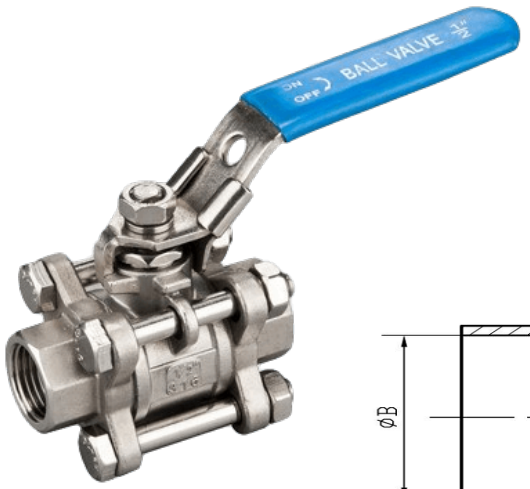

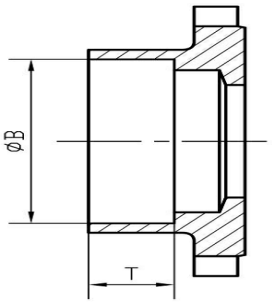

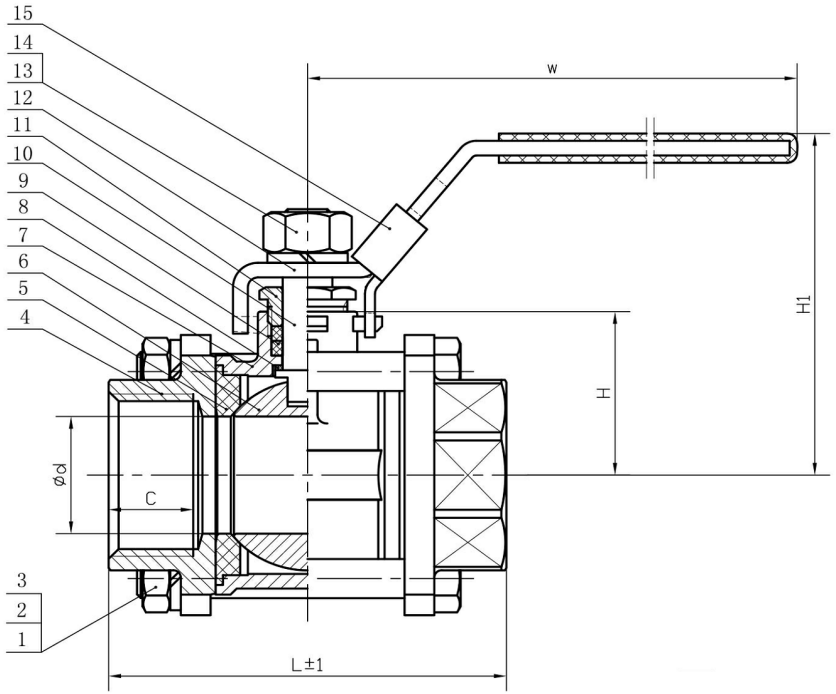

No	Parts name	material
1	Bolt	ASTM A276 304
2	Spring Washer	ASTM A276 304
3	Nut	ASTM A276 304
4	End Cap	ASTM A351 CF8M
5	Seat	PTFE
6	Ball	ASTM A276 316
7	Body	ASTM A351 CF8M
8	Stem Gasket	PTFE
9	Packing	PTFE
10	Stem Gasket	ASTM A276 316
11	Packing Gland	ASTM A276 304
12	Handle	SS201
13	Spring Washer	ASTM A276 304
14	Handle Nut	ASTM A276 304
15	Handle Lock	ASTM A276 304

SIZE	⌀d	L	H	H1	W	C	⌀B	T
¼	10	55	20.5	51.5	90	12	14.1	10
⅜	10	55	20.5	51.5	90	12	17.55	10
½	15	60	26	59	98	13.5	21.7	10
¾	20	70	30.5	67	115	14	27.05	13
1	25	80	33.5	67.5	125	17	33.8	13
1¼	32	92	41.5	80.5	148	18	42.55	13
1½	38	107	51	95	168	20	48.65	13
2	47	125	58	102	168	22	61.1	16
2½	64	160	72.5	125	237	29	73.8	16
3	76	180	83	135.5	237	29.5	89.3	16
4	98	225	105	165.5	295	35	115.45	19

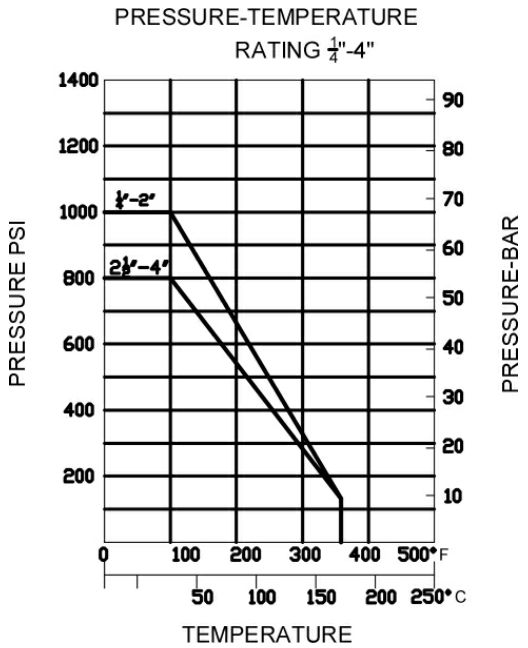

TECHNICAL SPECIFICATION

1. Basic design and manufacture acc. ANSI B16.34
2. Adjustable packing gland, Bottom-loaded blow-out proof stem
3. NPT threaded ends complied with ANSI B 1.20.1
4. Rc,Rp & G threaded ends complied with BS 21/2779, DIN 259/2999, ISO 228 are upon request
5. Inspection and tested according to API 598

Main Technical Parameter			
Normal pressure		4.0	MPa
Test pressure	Shell test pressure	6.0	MPa
	Tightness test	4.4	
	Gas-Tightness test	0.6	
Max working temperature		-20~100	℃
Applicable medium: water, gas, oil, acid			

RO-FI Edelstahlhandel GmbH 💻 **http: www.rofi.de** ✉ **info@rofi.de** ☎ **+49 (0) 212 / 23254-0**